# *The state of ETIM*

*The story of a slow but steadily growing data diamond*

ETIM
International

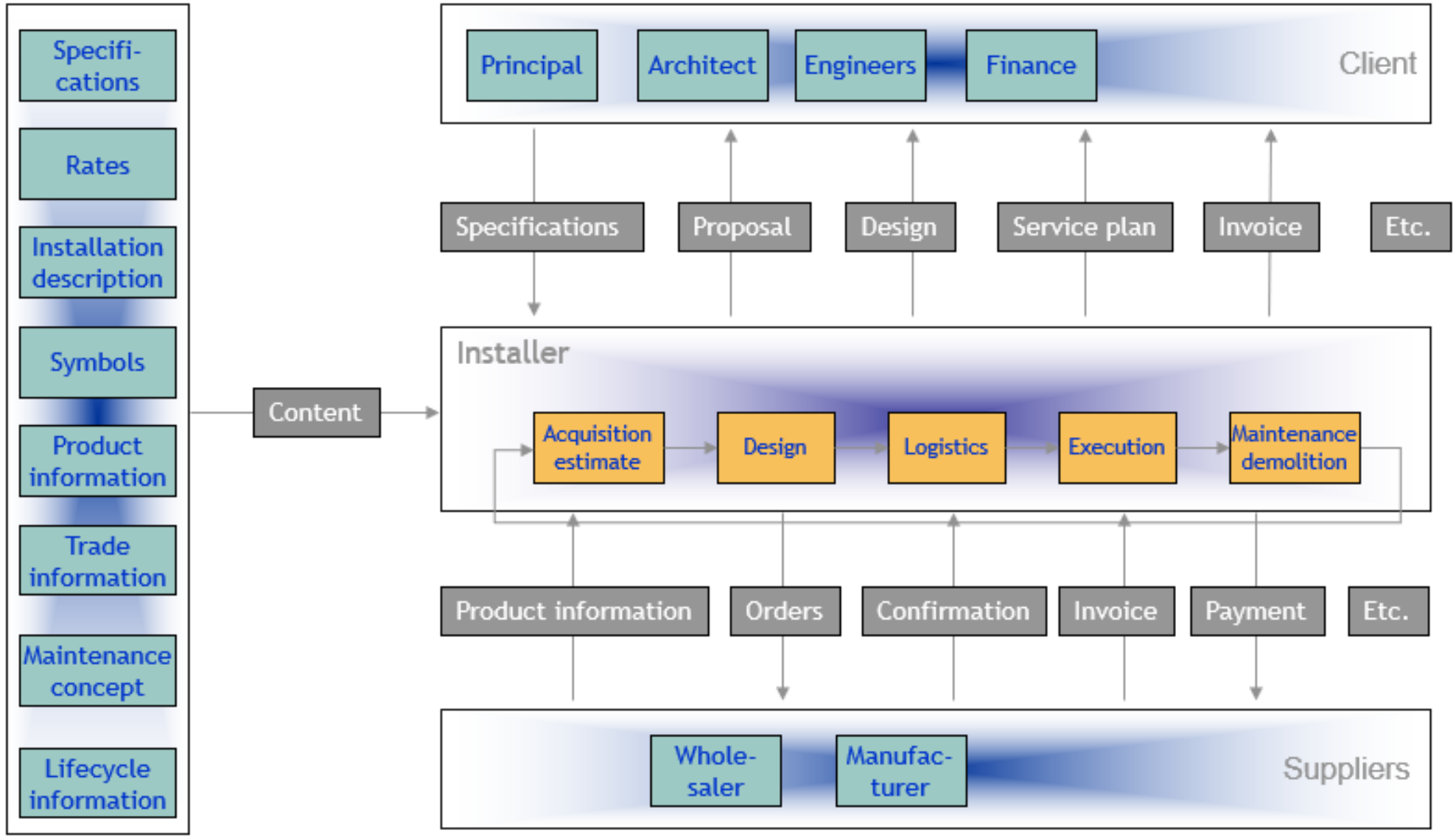
Specifi-cations
Rates
Installation description
Symbols
Product information
Trade information
Maintenance concept
Lifecycle information
Content
Principal
Architect
Engineers
Finance
Client
Specifications
Proposal
Design
Service plan
Invoice
Etc.
Installer
Acquisition estimate
Design
Logistics
Execution
Maintenance demolition
Product information
Orders
Confirmation
Invoice
Payment
Etc.
Whole-saler
Manufac-turer
Suppliers

ETIM
International

ETIM
*Deutschland*

**1999**

ETIM
International

1997
2001
2002
2003

EUEW

european union
of electrical wholesalers

ETIM
International

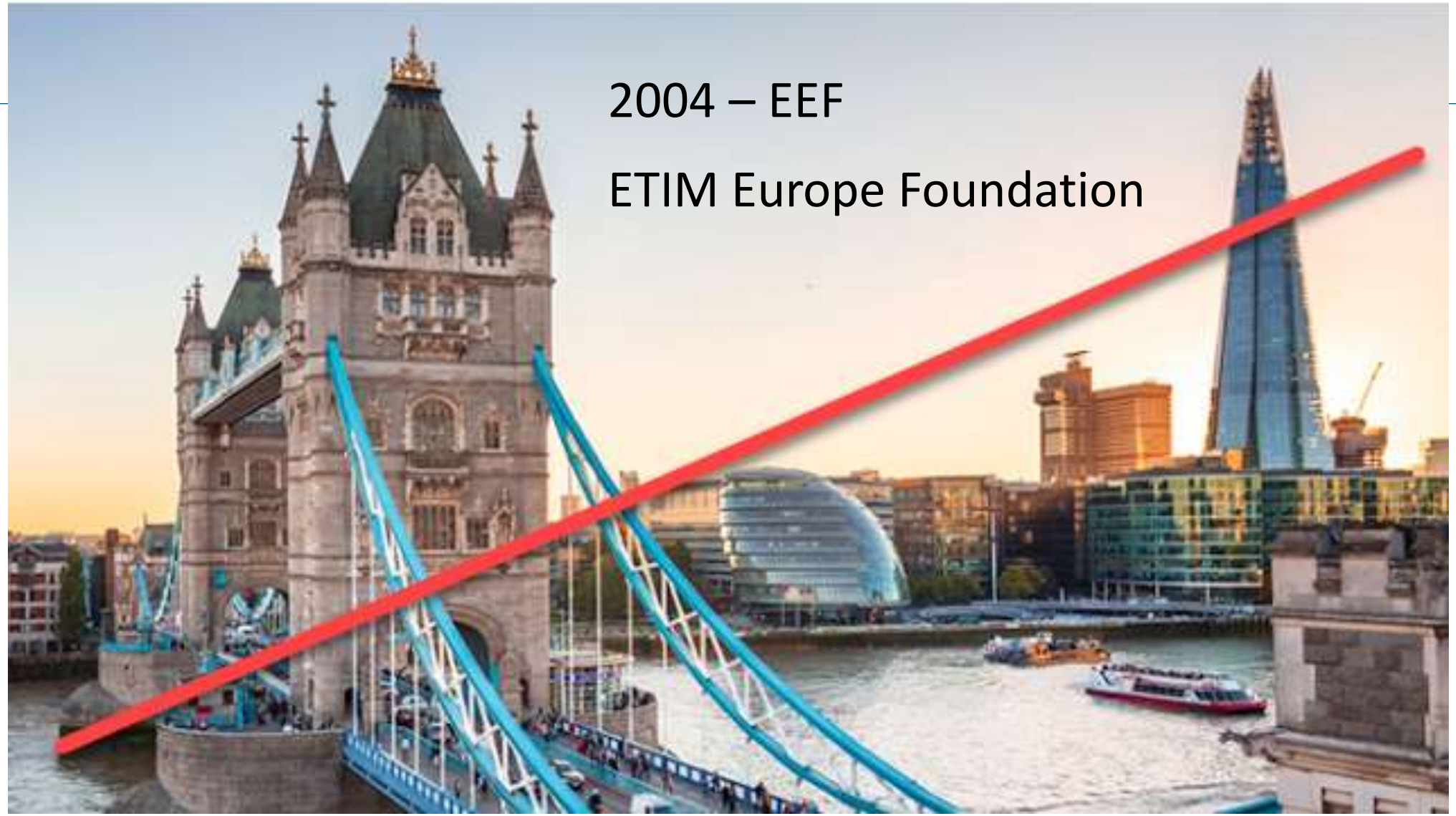
2004 – EEF
ETIM Europe Foundation

ETIM International

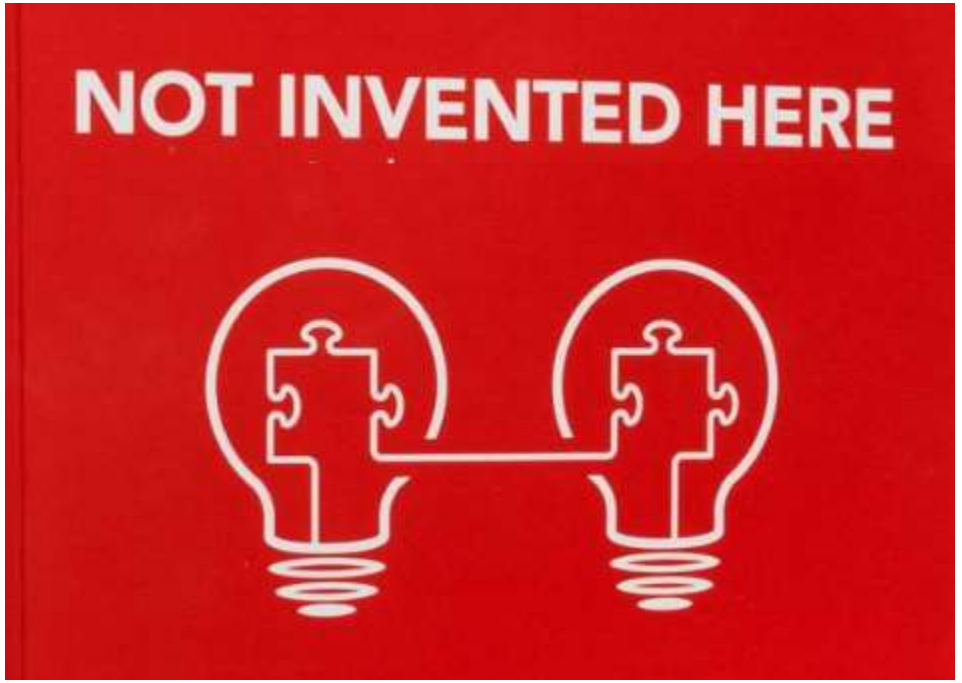
NOT INVENTED HERE

ETIM
International

# ~~Current~~ version: ETIM 3.0

- ETIM 3.0 published June 2005
  - Germany and The Netherlands
- ETIM 3.0 facts
  - Classes 2174
  - Features 5447
  - Attributes 6099
  - Synonyms 21279
  - In German, Dutch and English
- BMEcat as standard interface
  - Common suppliers guide for all wholesalers in Germany

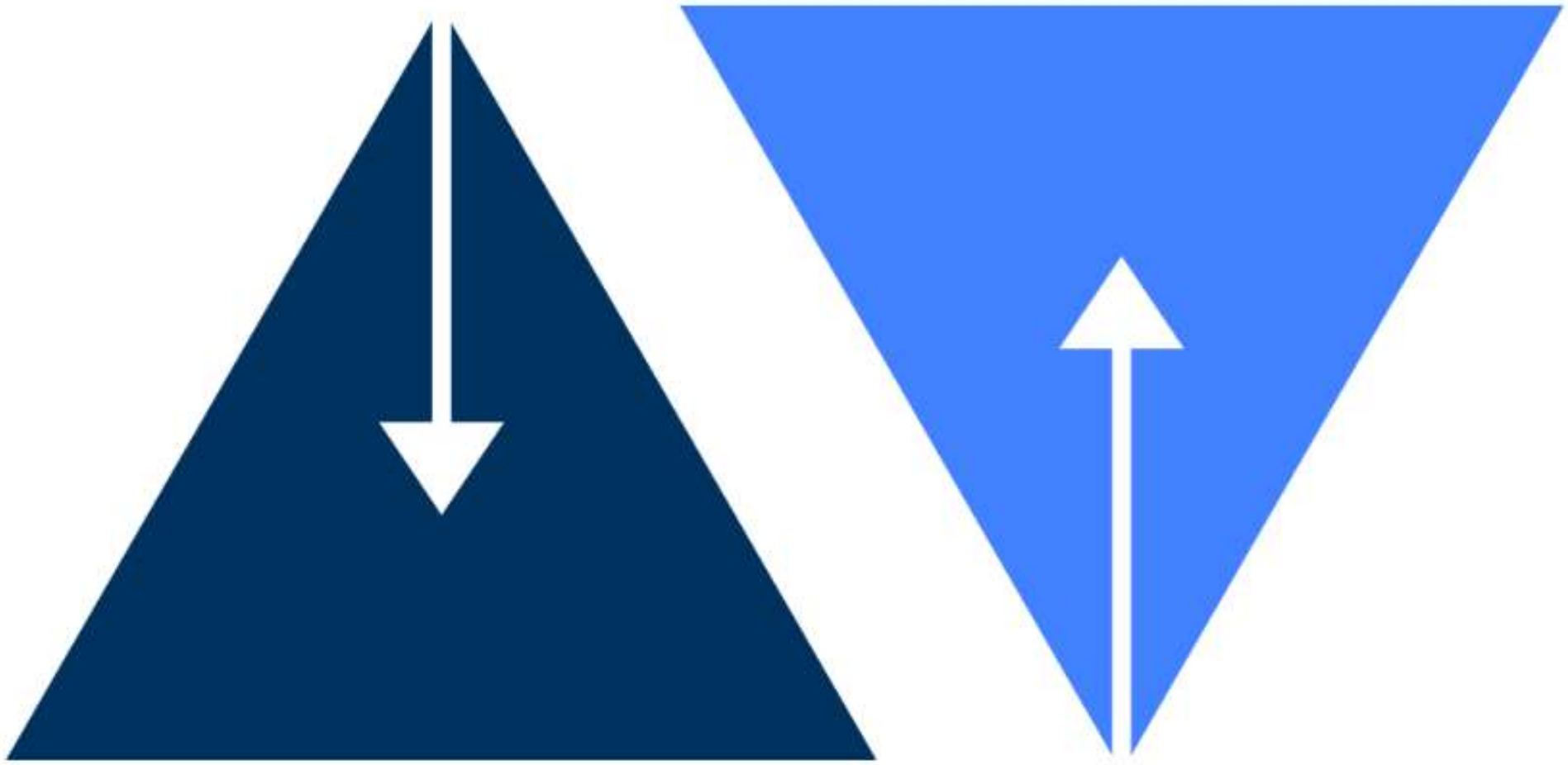

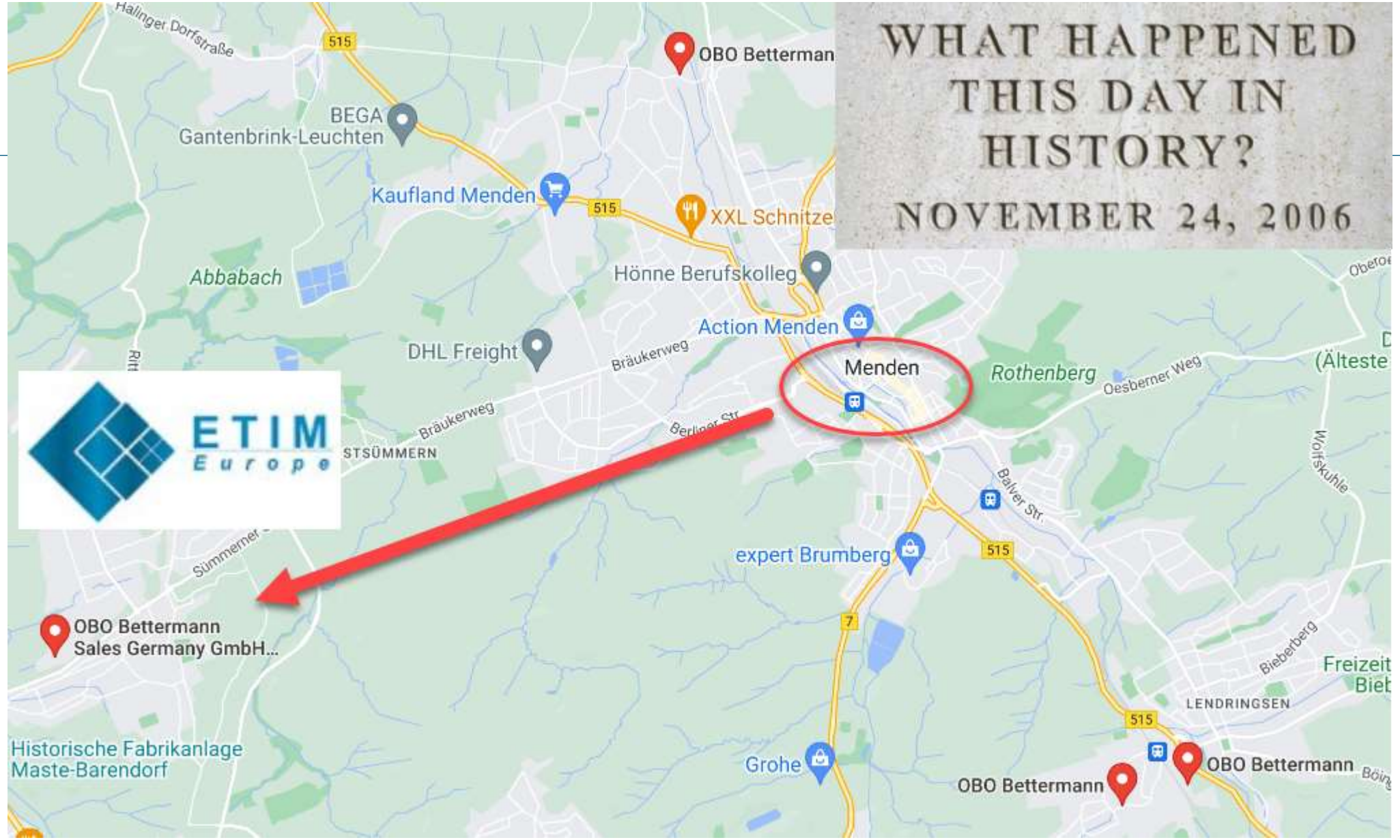
WHAT HAPPENED THIS DAY IN HISTORY?
NOVEMBER 24, 2006
Halinger Dorfstraße
515
OBO Betterman
BEGA
Gantenbrink-Leuchten
Kaufland Menden
515
XXL Schnitze
Abbabach
Hönne Berufskolleg
Action Menden
DHL Freight
Bräukerweg
Menden
Rothenberg
Oesberner Weg
Bräukerweg
Berliner Str.
STSÜMMERN
Balver Str.
Wolfskuhle
Sümmerner
expert Brumberg
515
7
OBO Bettermann
Sales Germany GmbH...
Bieberberg
Freizeit
LENDRINGSEN
515
Historische Fabrikanlage
Maste-Barendorf
Grohe
OBO Bettermann
OBO Bettermann

***Agenda for this meeting:***

| | | |
|---|---|---|
| 11:00 | Opening and welcome | Andreas Bettermann |
| 11:10 | Introduction of the participants | All |
| 11.20 | Status ETIM in Germany and the Netherlands | Franz Ernst-Marc Habets |
| 11.40 | Concept community of interests ETIM Europe | Franz Ernst |
| 12.00 | Introduction ETIM Europe database and website | Marc Habets |
| 12.15 | Inventory of discussion items | All |
| 12:30 | Lunch | |
| 14:00 | Discussion | All |
| 15:00 | Letter of Intent | All |
| 15.30 | End of the meeting | |

ETIM International

ETIM
International

ETIM
International

# ETIM=?

Abbreviation Finder

| Acronym | Definition |
| --- | --- |
| ETIM | Electro-Technical Information Model |
| ETIM | East Turkestan Islamic Movement |
| ETIM | SEE ALL >> |
| ETIM | SEE ALL >> |

ETIM International

ETIM International

GRUNDFOS · Prysmian Group · SIEMENS · sonepar · Schneider Electric · REXEL

ETIM
International

## Development ETIM-model

| Numbers | 2005 (ETIM 3.0) | 2008 (ETIM 4.0) | 2011 (ETIM 5.0) | 2014 (ETIM 6.0) | 2017 (ETIM 7.0) | 2020 (ETIM 8.0) |
|---|---|---|---|---|---|---|
| Classes | 3.487 | 3.584 | 3.732 | 4.395 | 4.725 | 5.416 |
| Synonyms (only ETIM English here) | | | 8.318 | 10.837 | 21.565 | 30.605 |
| Features | 10.423 | 10.394 | 10.795 | 12.426 | 13.752 | 15.748 |
| Class-feature (relations) | 36.902 | 40.535 | 42.769 | 49.364 | 56.628 | 68.258 |
| Values | 9.023 | 9.246 | 9.887 | 11.311 | 13.047 | 14.796 |
| Class-feature-value (relations) | 112.350 | 119.841 | 125.280 | 139.764 | 155.698 | 182.303 |

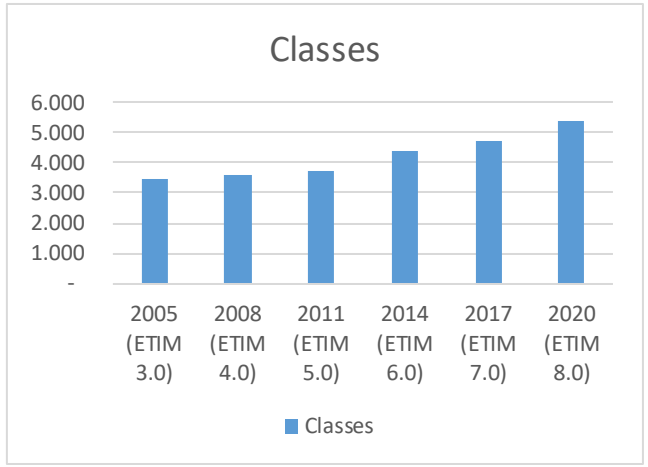


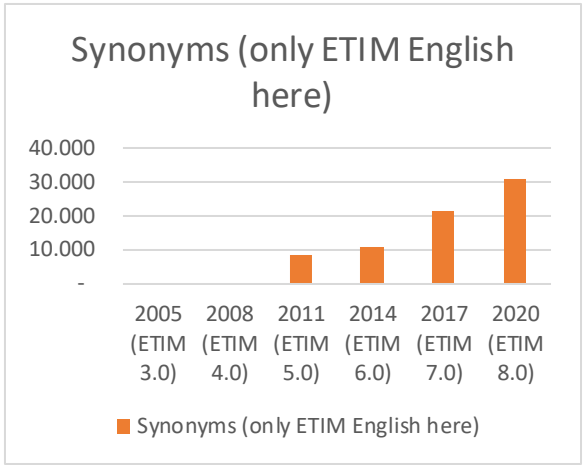


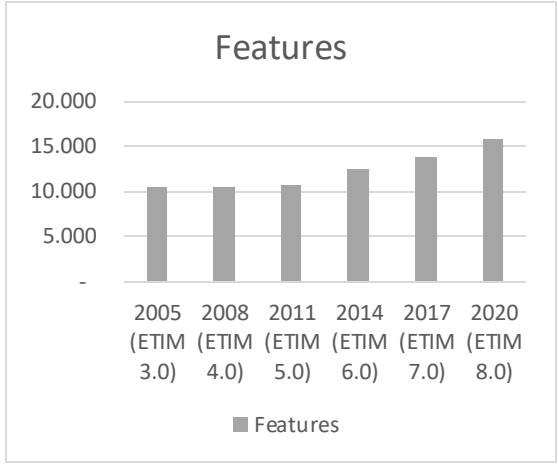


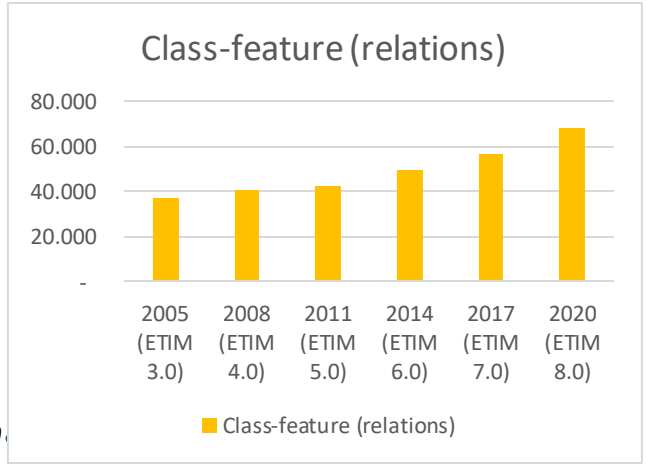


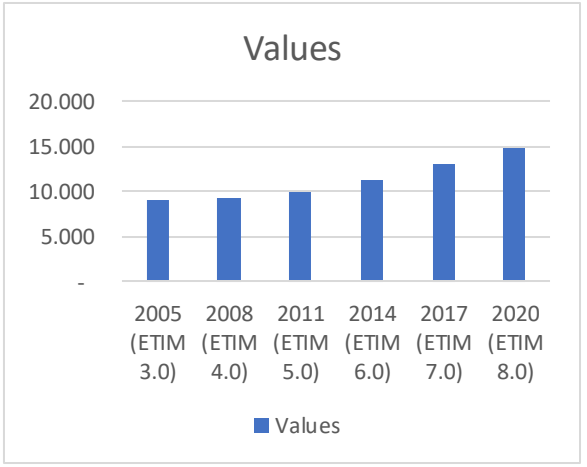


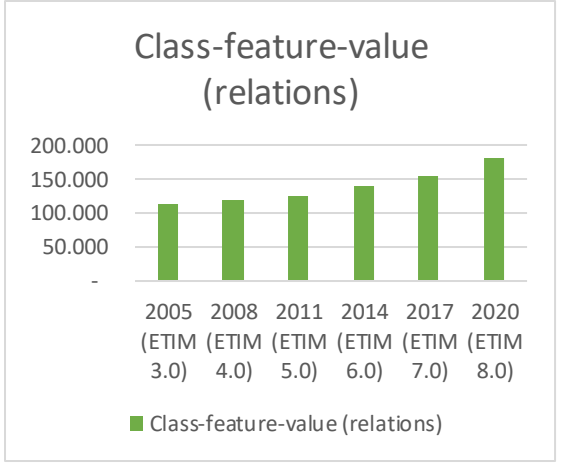

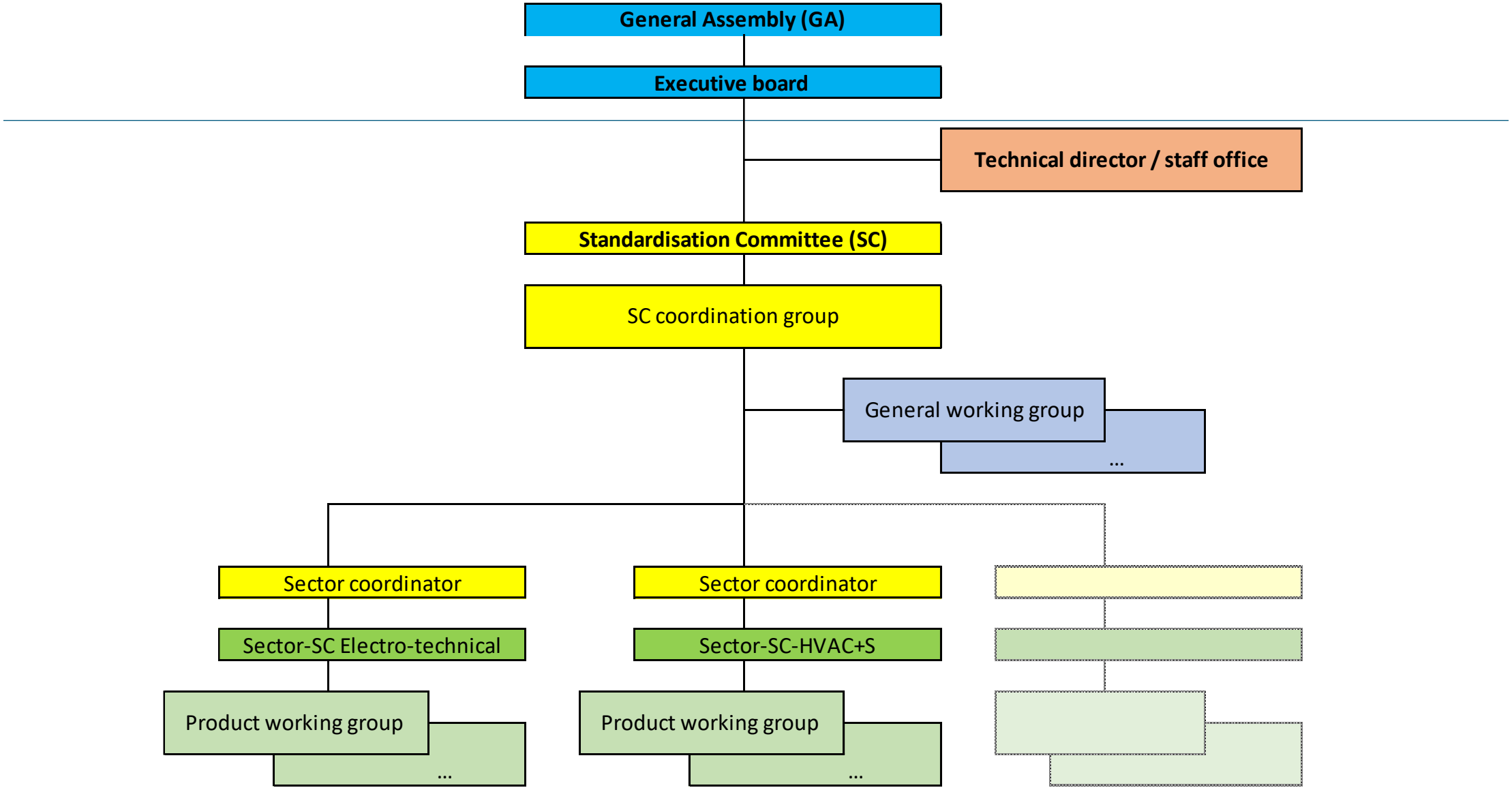


ETIM International

ETIM
International

# ETIM Modelling Classes

*Standardised geometric parameters for data driven BIM objects.*

# *Building life cycle*

- *There are different information needs in every phase of this cycle*

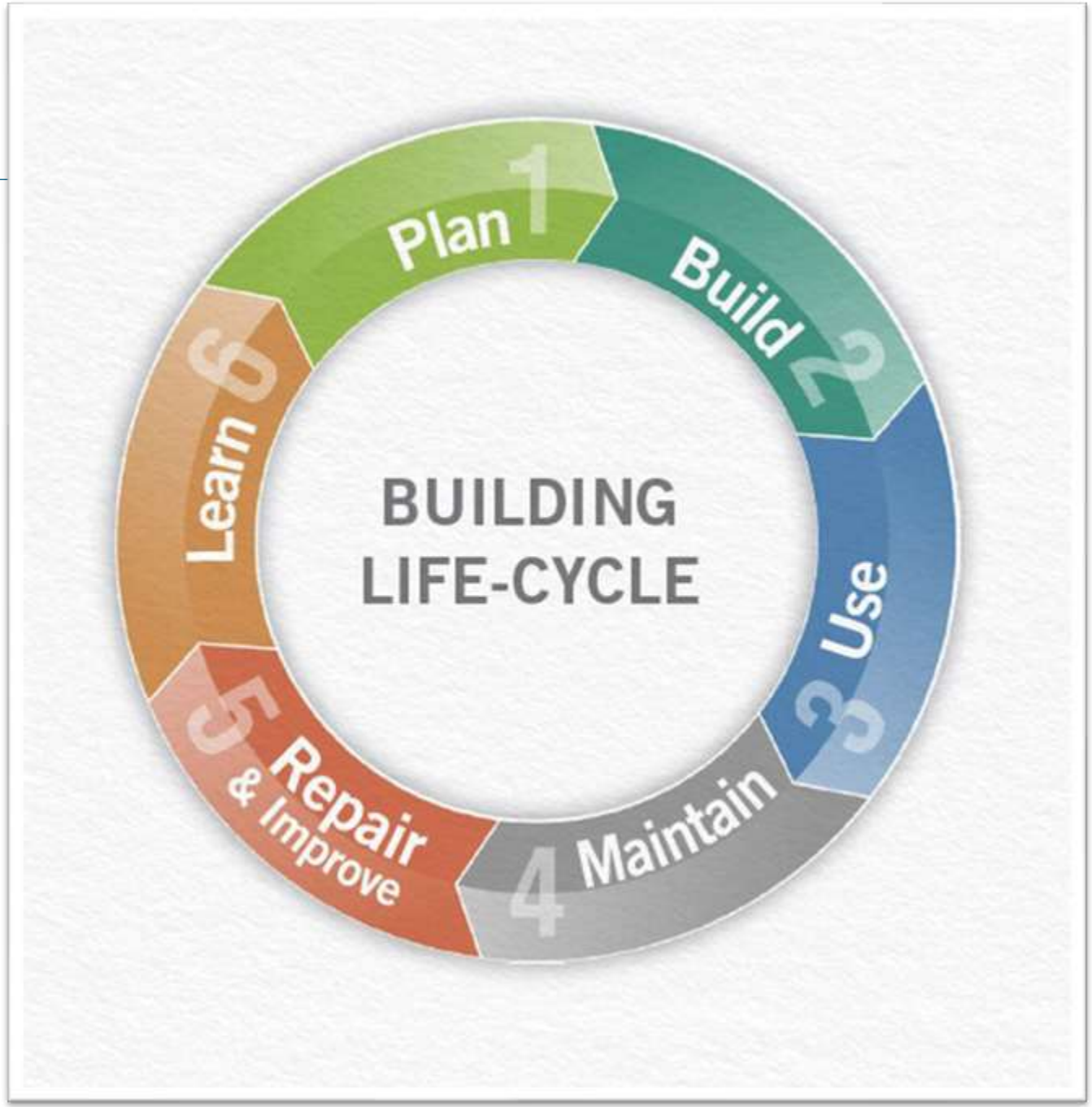


ETIM International

ETIM
International

# BIM Model

- Building
- Information
- Modelling

- Collaboration
- Eliminate mistakes
- Optimization

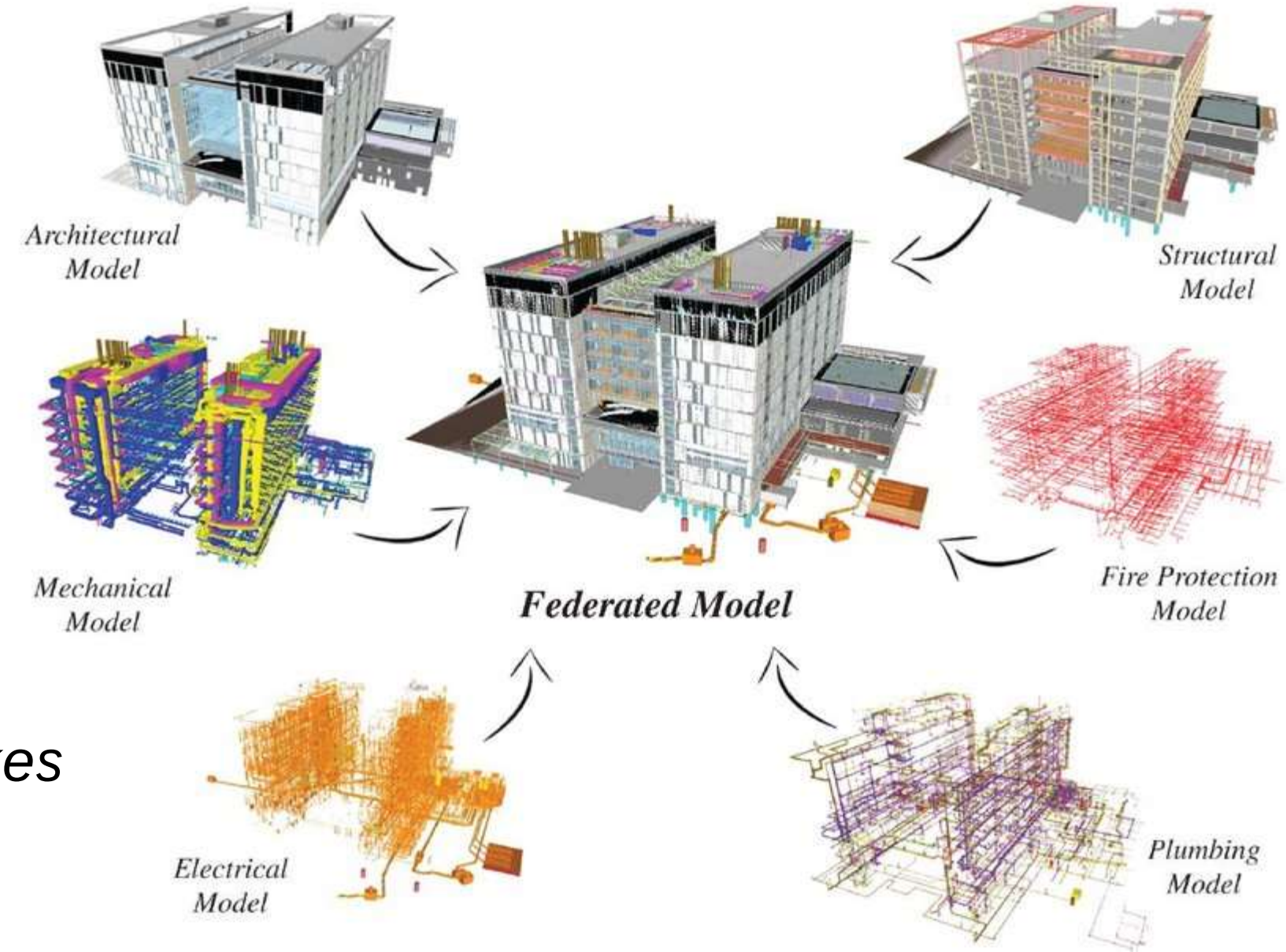


ETIM International

# *Information stages of a building*

- *Conceptual design*
- *Preliminary design*
- *Final design*
- *Technical design*
- *Pre-build design*
- *As-built model*
- *As-maintained model*

***"The design changes with every step in the process"***

# BIM Dimensions

- *Every dimension adds an extra layer of information needed*

ETIM International

# Level of detail (LOD)

- ***The finer the model, the more coffee you can drink…***

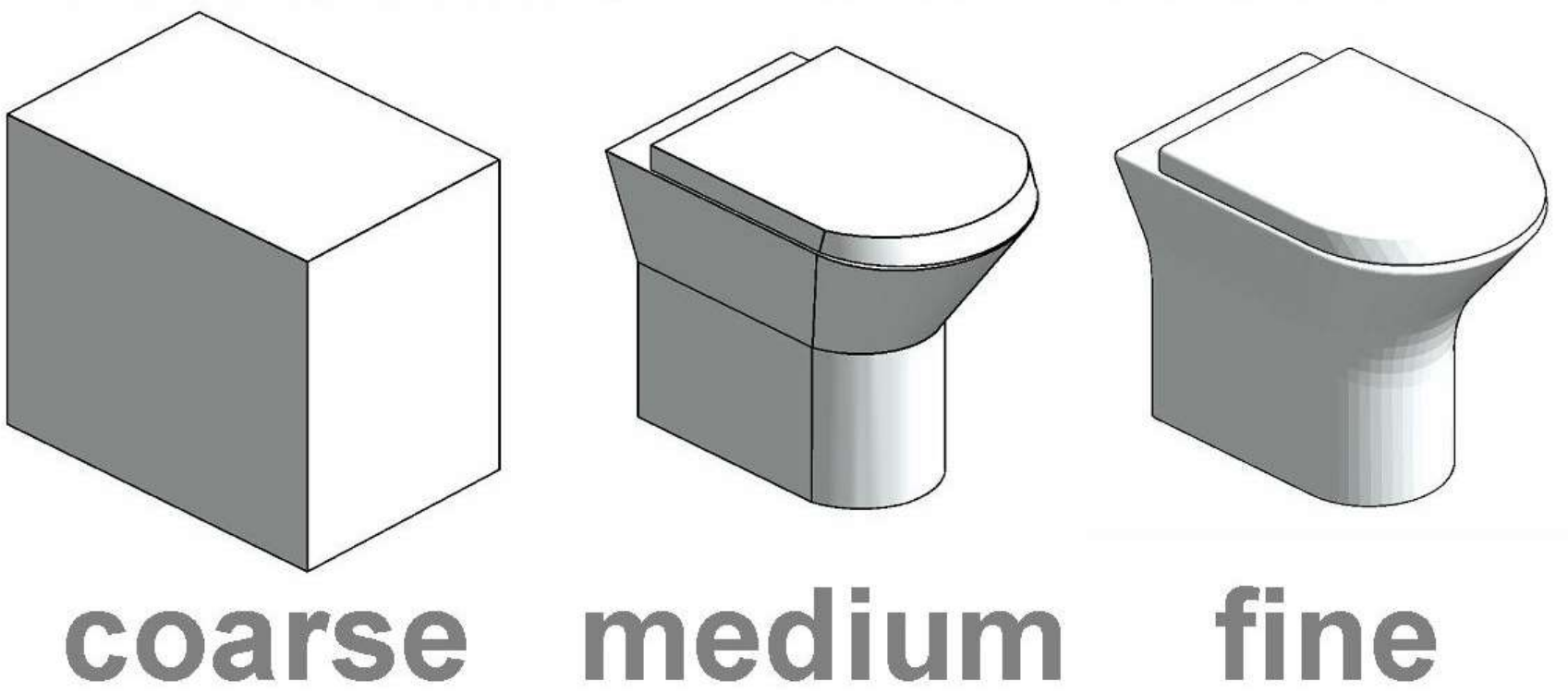


ETIM International

# *Level of too much detail..*

Engineer sends a cry for help
on Linkedin not to put in
3D logos into BIM objects.
As this kills performance in BIM
models….

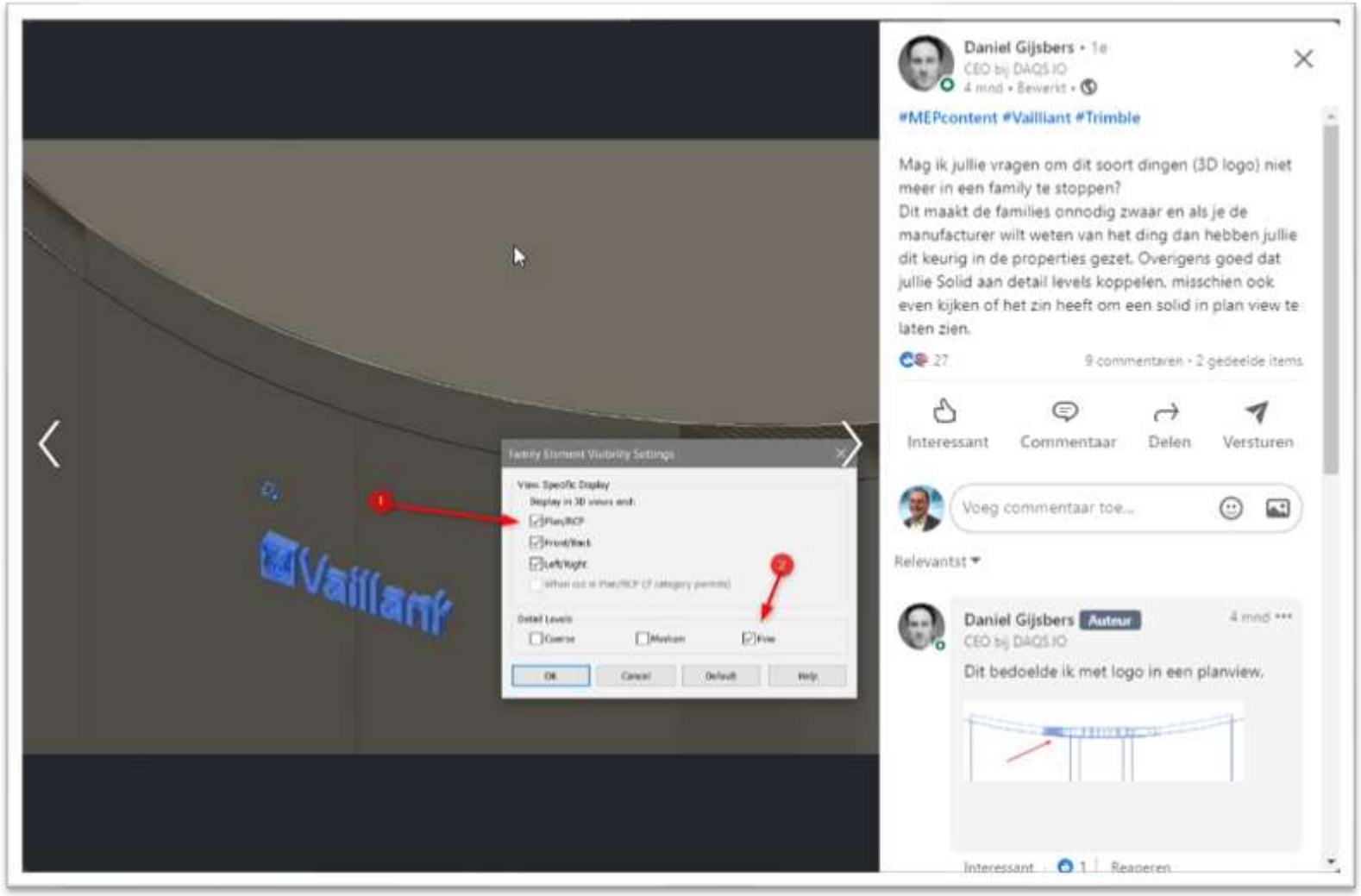


ETIM International

# *What should a BIM object look like?*

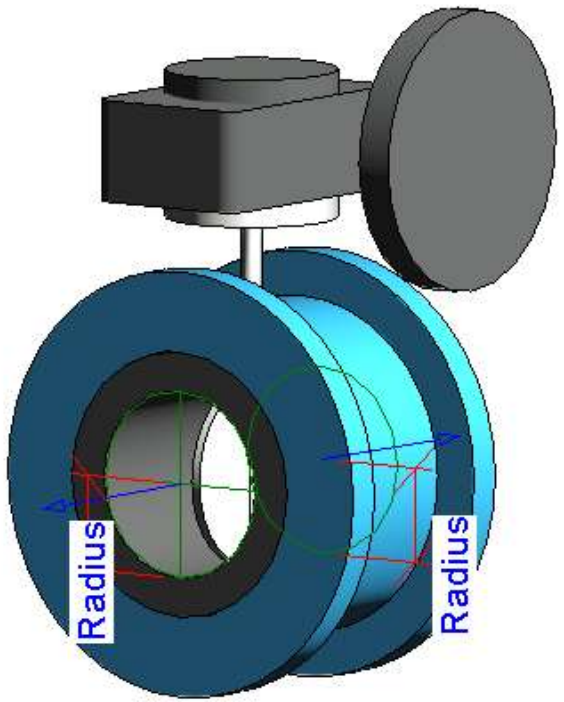


+

- ***Geometry** in **3D** that resembles its **physical appearance***
- *Contains as much **DATA** as possible*
- ***Can be imported** into BIM software*
- *Preferably as a **parametric family***
- ***Validated, up to date***

ETIM International

# 4 reasons why every manufacturer needs to get into BIM

Sarah Chase 29 March 2021

**Every year, architects, engineers and interior designers specify millions of products and building materials worth billions of EUR in sales. But how can you tap into that goldmine and get on their shortlist? The answer lies in BIM.**

## Why BIM bumps the likelihood of getting specified

Specifications are the golden goose for manufacturers. But if you want to get in, you have to get your products and the information into the right hands.

January 29, 2018 Jokūbas Vaišvila

# Manufacturers, we need you in BIM!

Let's start off with a brief look at what BIM is. The **purpose of BIM** is to give each actor just the information they need at just the right time throughout a building's lifecycle to support its effective design, creation, and use.

- **The "B" in BIM stands for "Building"** – since it's about methods and technologies for the effective design, creation, and use of buildings.
- **The "I" in BIM stands for "Information"** – the 3D representations and non-graphical data in the digital model of a building. It's the key to managing a building throughout its lifecycle.
    - Besides 3D information – for design, engineering, and production – there's also
        - 4D information that incorporates time (scheduling, planning, and control),
        - 5D which adds costs and analysis,

ETIM International

# *The challenges in BIM modelling*

***Manufacturer:***
***"I like to supply content"***

- *There are 40+ different file formats?!?*
- *In every country a different BIM standard for data*
- *BIM technology is constantly evolving*
- *Ends up* ***spending too much with achieving too little***

***Contractor:***
***"I need content!"***

- *Scraping the internet in search of content*
- *Never in the right format*
- *Old, non-compatible files*
- *Missing data*
- *Ends up* ***re-drawing every single object for use in their own content library***

ETIM
International

https://youtu.be/m4OvQIGDg4I

ETIM International

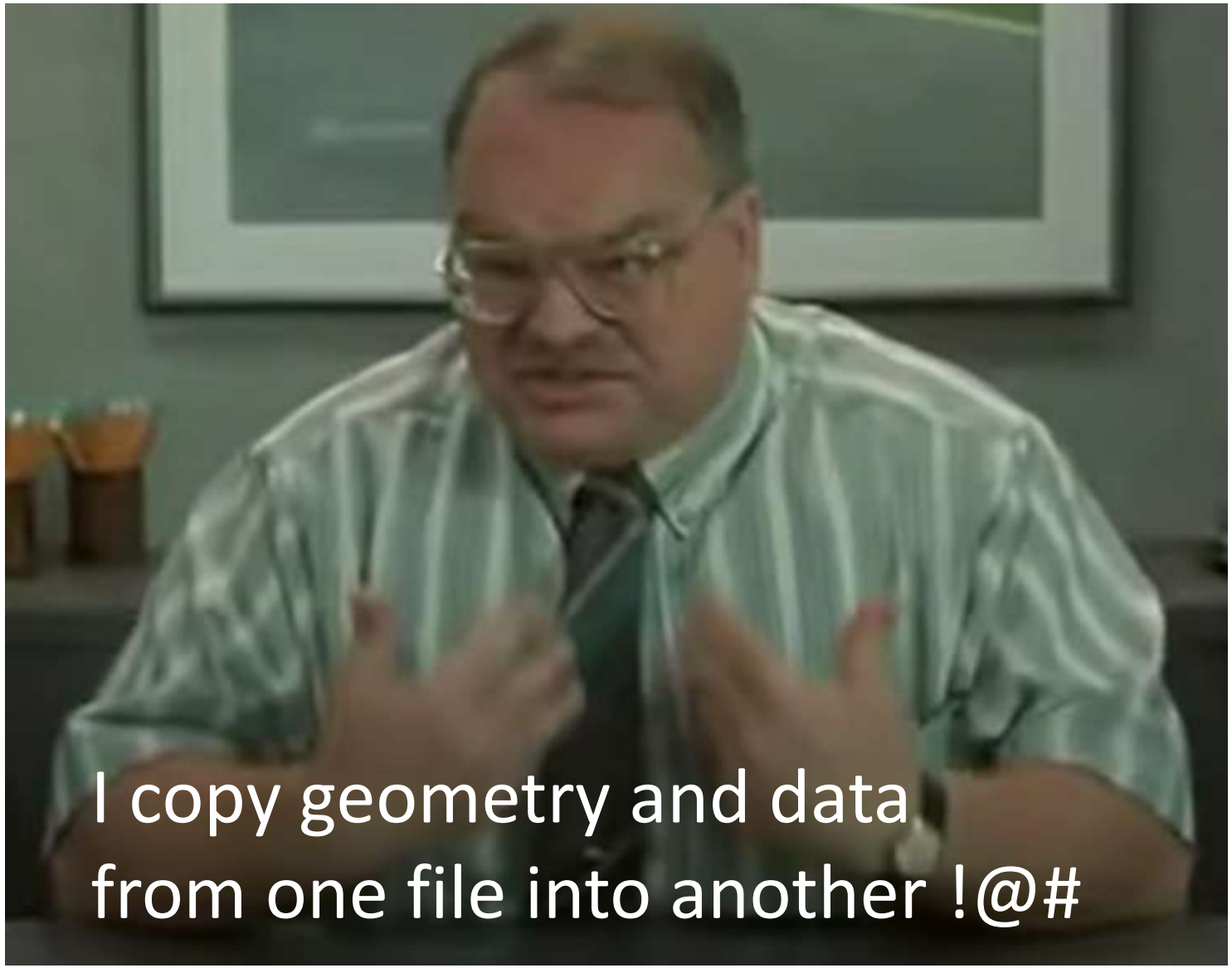


ETIM International

ETIM International

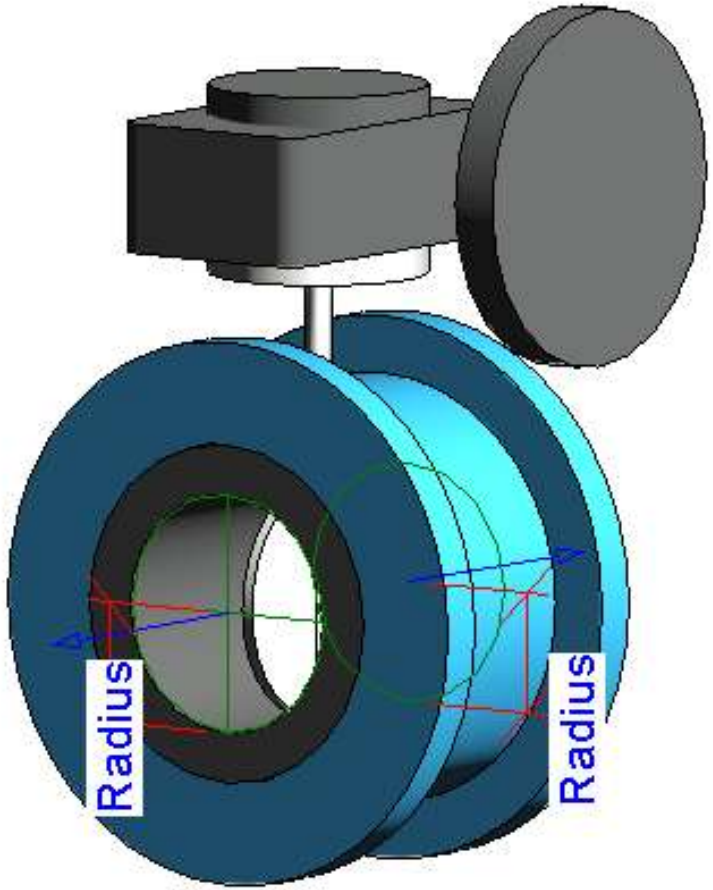


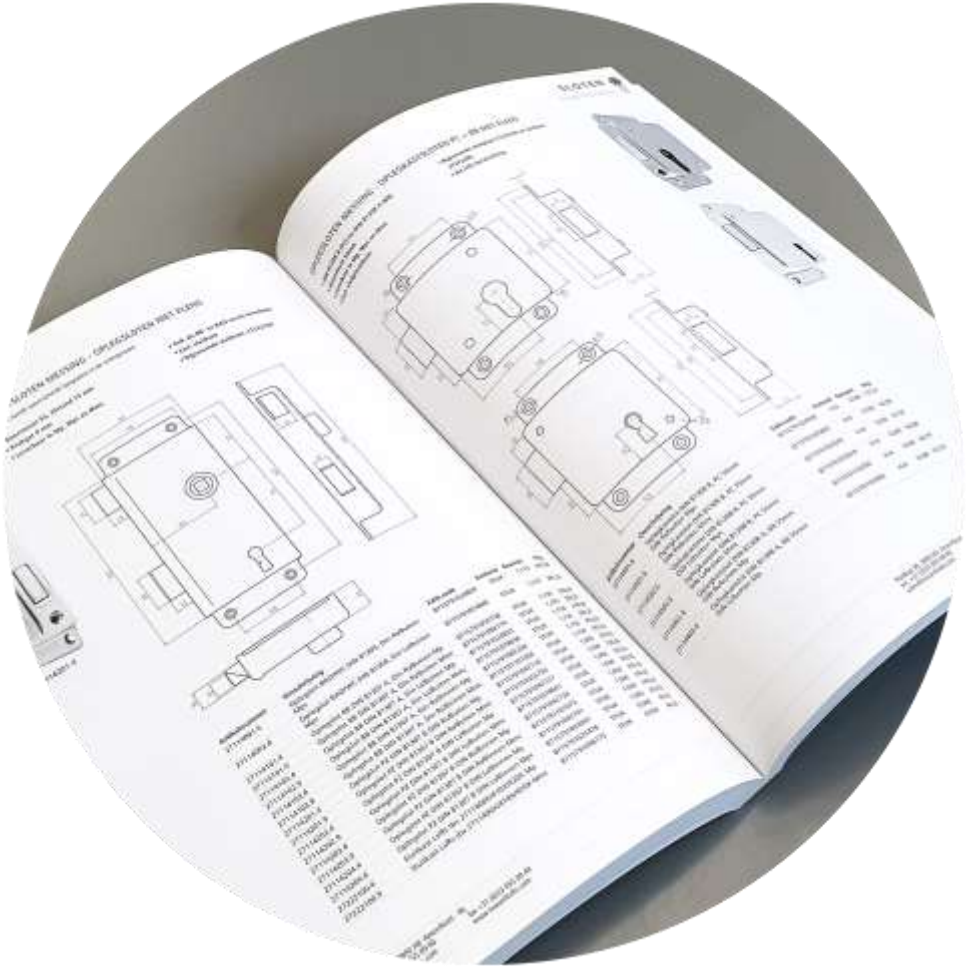

ETIM
International

NEW
P31
AUTOCLICK

# Parametric Object of a cable tray

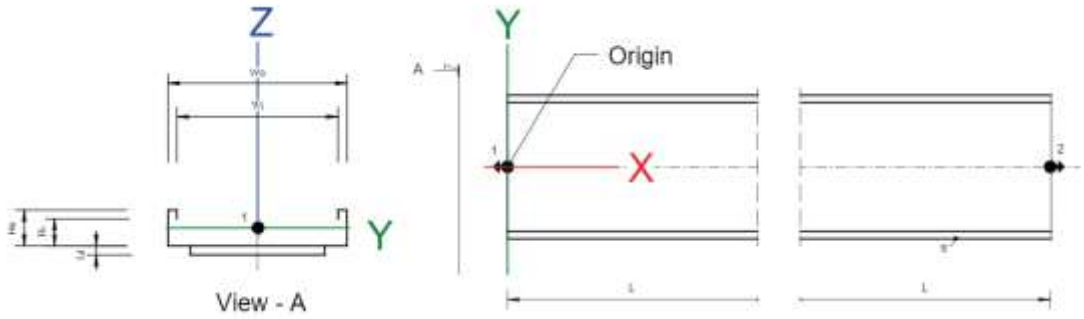


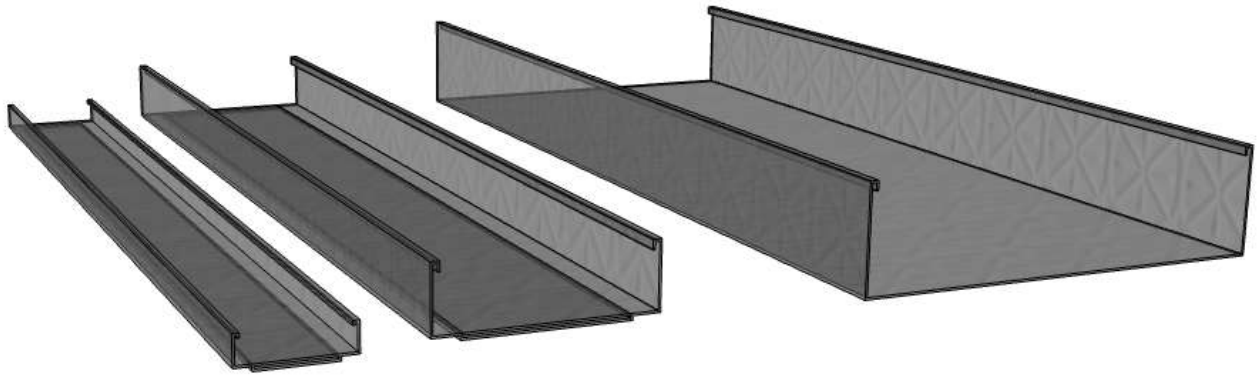

| Artnr | Height (Ho) | Width (Wo) | Length (L) | Material thickness (s) | Inner Height (Hi) | Inner Width (Wi) | Length push through section (Ld) |
|---|---|---|---|---|---|---|---|
| CT100 | 25 | 100 | 1000 | 2 | 23 | 88 | 4 |
| CT200 | 60 | 200 | 1000 | 2 | 56 | 184 | 4 |
| CT400 | 100 | 400 | 1000 | 2 | 96 | 384 | 0 |

ETIM International

| | Def | Code | Drawing code | Description | Type | Unit |
|---|---|---|---|---|---|---|
| 1 | | EF010059 | Hi | Inner height | N | mm |
| 2 | | EF000040 | Ho | Height | N | mm |
| 3 | | EF001438 | L | Length | N | mm |
| 4 | | EF010859 | Ld | Length push through section | N | mm |
| 5 | | EF000386 | s | Material thickness | N | mm |
| 6 | | EF010004 | Wi | Inner width | N | mm |
| 7 | | EF000008 | Wo | Width | N | mm |

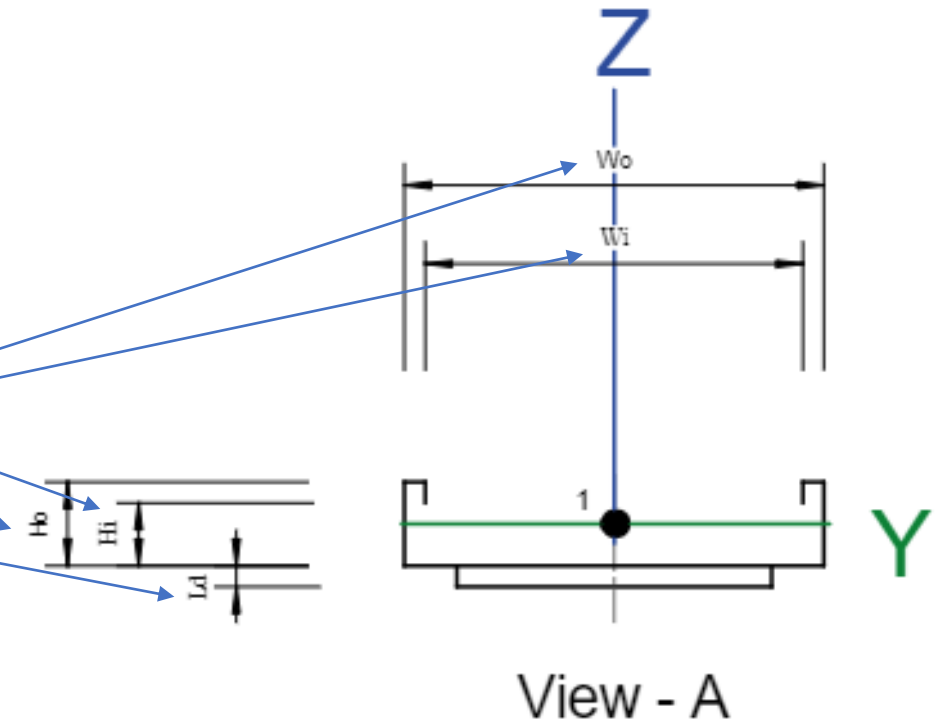


View - A

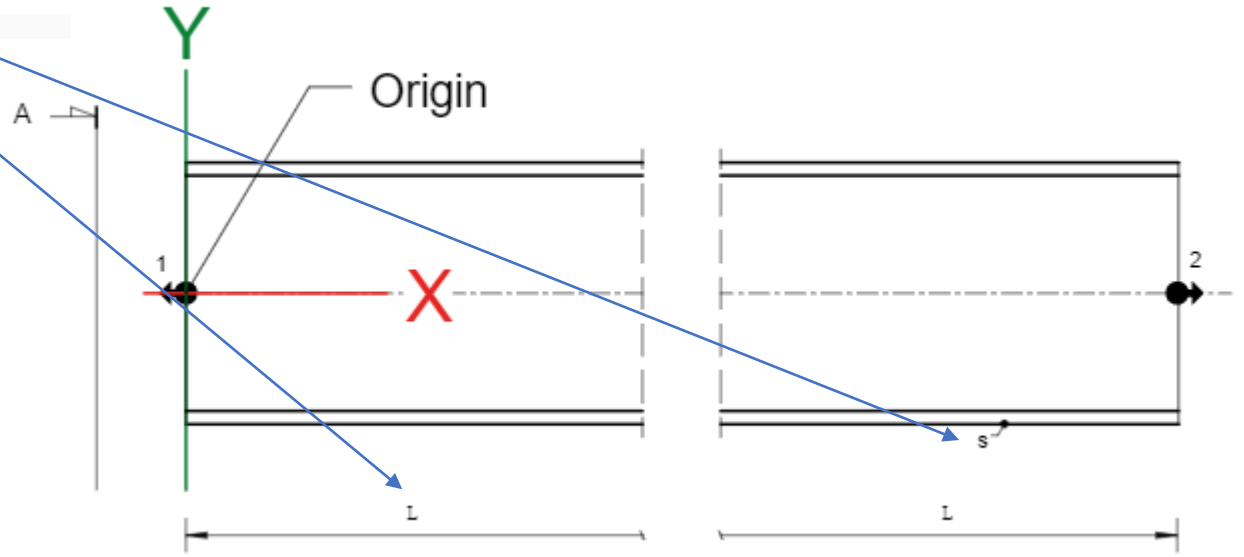


ETIM International

# Data driven BIM objects from ETIM data

- *Separate style from content*
- *Software independent*
- *Manufacturer only supplies data*
- *BIM modellers can use any file format, technology, software platform of their choice.*
- *All ETIM data available at their fingertips*

| | |
|---|---|
| ETIM Productklasse | Kabelgoot |
| ETIM Modelleer klasse | Kabelgoot (zonder deksel) |
| Fabrikant | Legrand Nederland |
| Merk | Legrand |
| Serie | ISPL |
| Type | - |
| GTIN | 03245066378305 |
| Productcode | 637830 |
| GLN | 8714161999999 |
| Status | 126 |
| Gewicht | 6,501 Kilogram |
| Voorganger | - |
| Opvolger | - |

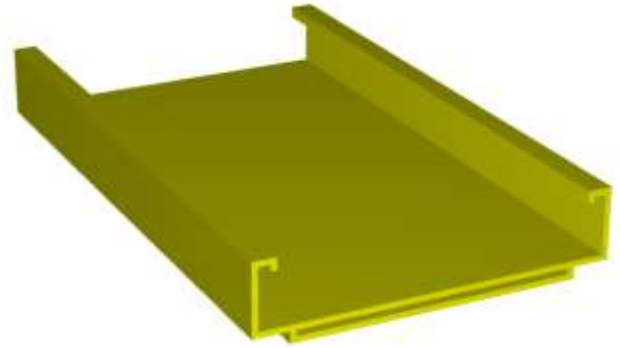

| Leverancier | Artikelnr. | Omschrijving | Inhoud | Bruto | Netto | Voorraad |
|---|---|---|---|---|---|---|
| legrand | | | | | | |
| DTC | | | | | | |
| Elmet | | | | | | |
| FDI | | | | | | |
| itsme | | | | | | |
| OOSTERBERG | | | | | | |
| nexel | | | | | | |
| SALO | | | | | | |
| Sneeck | | | | | | |
| solar | | | | | | |
| TGH | | | | | | |

ETIM International

# Data driven BIM objects from ETIM data

- *Separate style from content*
- *Software independent*
- *Manufacturer only supplies data*
- *BIM modellers can use any file format, technology, software platform of their choice.*
- *All ETIM data available at their fingertips*

| | |
|---|---|
| ETIM Productklasse | Membraandrukexpansievat |
| ETIM Modelleer klasse | Membraandrukexpansievat verticaal hangend |
| Fabrikant | Flamco |
| Merk | Flamco |
| Serie | Expansion vessels heating & cooling |
| Type | Heating Clench ring Vessel [3bar] |
| GTIN | 08712874169173 |
| Productcode | 16917 |
| GLN | 8712874000001 |
| Status | 126 |
| Gewicht | 3,366 Kilogram |
| Voorganger | 16019 |
| Opvolger | - |

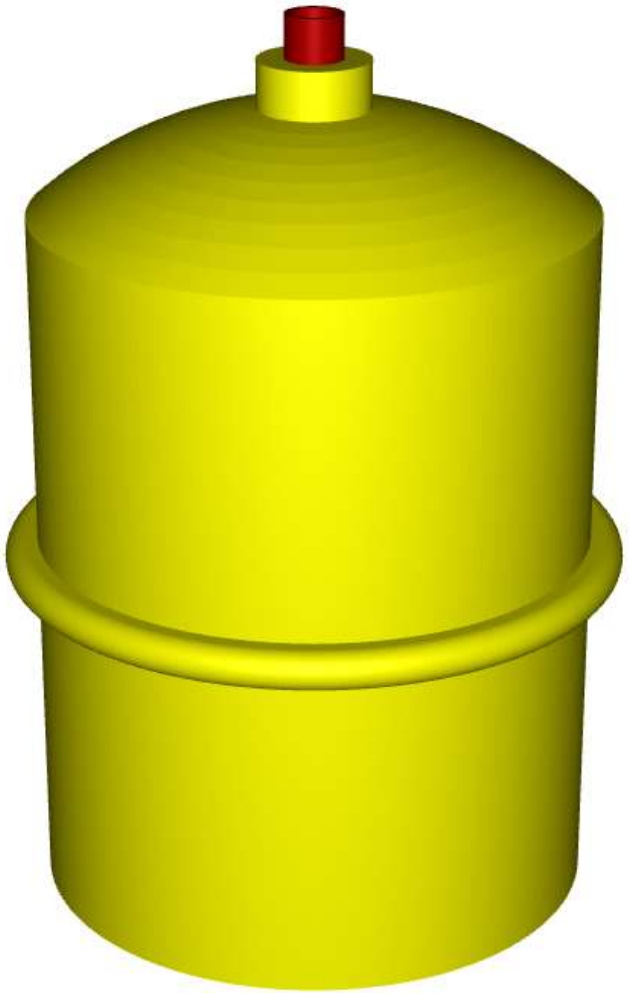

ETIM International

# Construction board

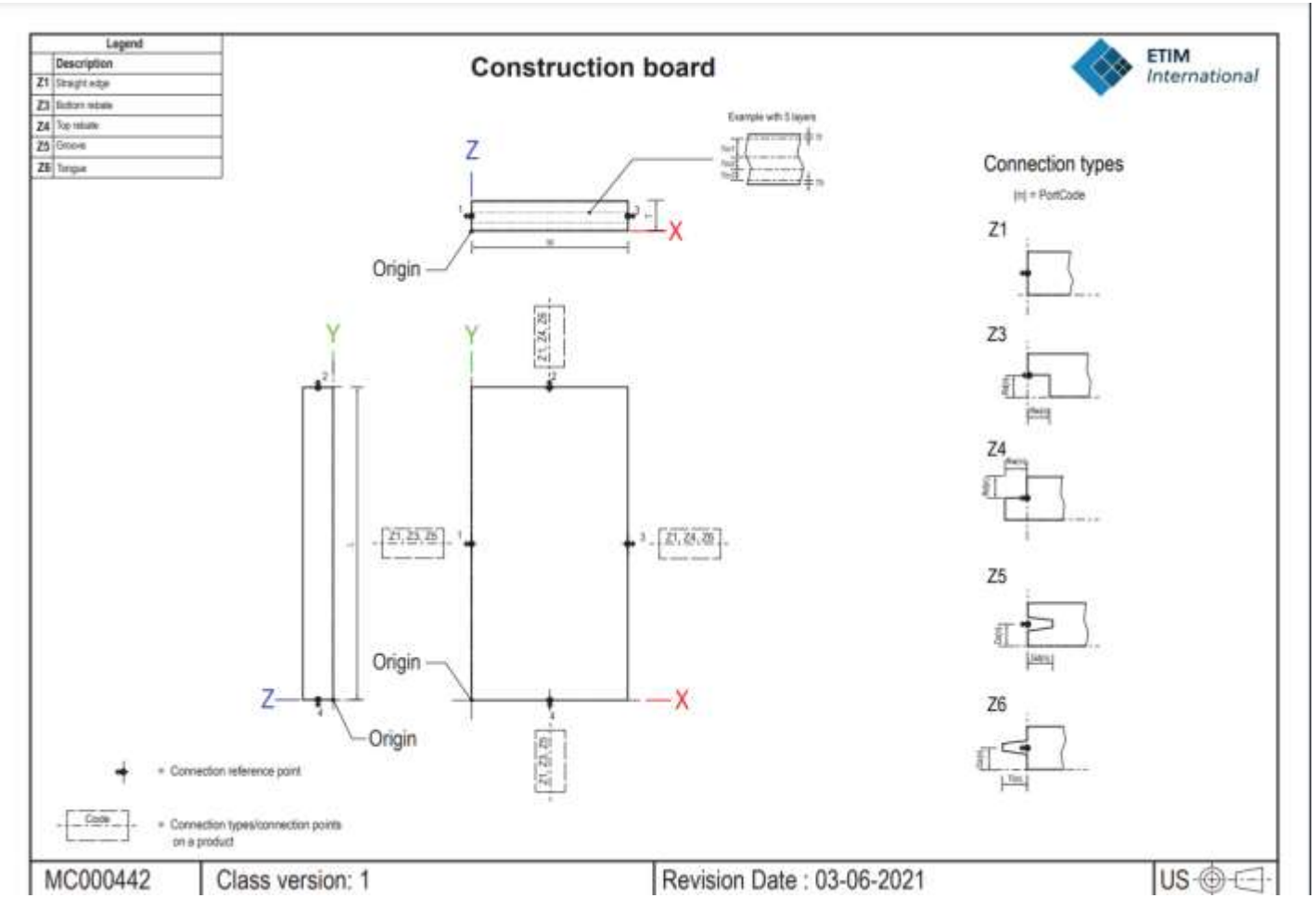


- *Any board-shaped product can be drawn by connecting a set of sizes from its manufacturer.*
- *On top of its regular ETIM data*
- *Linked to 14 ETIM classes*

ETIM International

# *Always up to date*

- *Start with generic model*
- *Load with candidate specific product*
- *Update and validate later in the process*
- *Easily find alternatives*

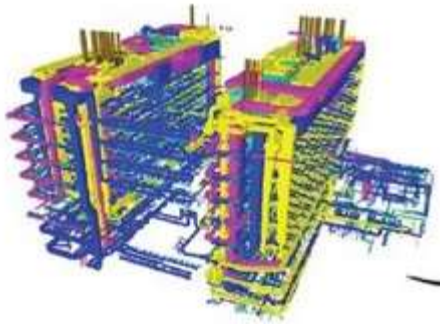

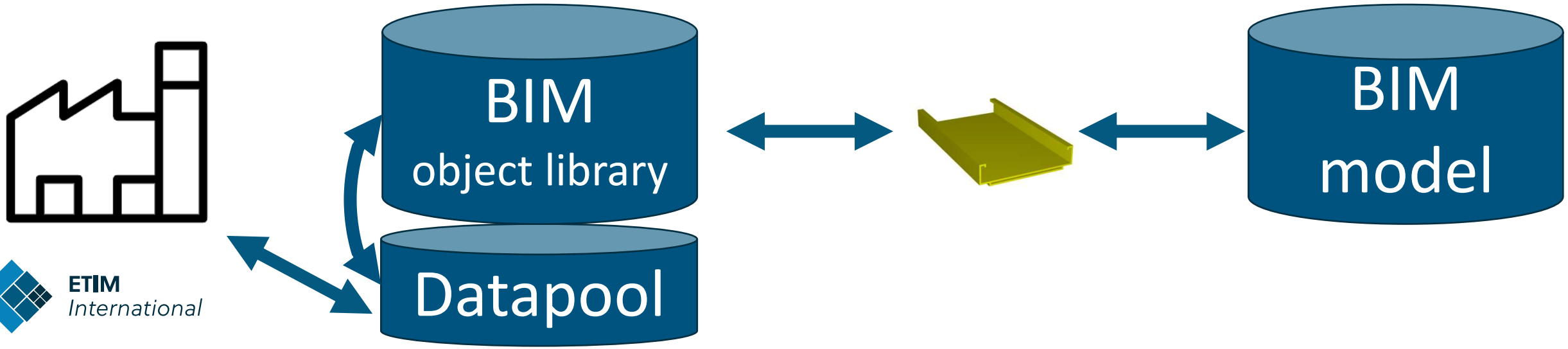


ETIM International

# *Benefits of using ETIM MC*

- *BIM modeller / Consultant / Contractor / Installer:*
  - *Getting **BIM objects like they want**, with up to date, **validated data** from manufacturer.*
  - ***Start with a generic object**, make it supplier-specific later simply by loading a set of ETIM data. Search for replacement based on ETIM class and feature specification.*
  - ***Re-validate BIM objects**: live updates of parameters from datapool.*

ETIM International

# *Benefits of using ETIM MC*

- *Manufacturer :*
  - *Only supply data through **existing ETIM workflow,** huge **cost savings** on maintaining BIM object libraries..*
  - ***Relieved from** keeping up with **BIM** technology developments.*
    *(not core business).*
  - ***Direct influence** on existing BIM models.*
    *(by updating their data).*

ETIM International

# *Benefits of using ETIM MC*

- *Wholesale :*
  - *Digitally **connecting ecommerce** platforms **to BIM** models.*
  - *Assuring **technical compatibility of offered products** through the ETIM model.*
  - *Connecting directly into BIM models opens up a huge potential on **optimizing on-site logistics**.*

ETIM International

# *ETIM MC as a standard*

*What does it mean to manage ETIM MC as an international standard?*

# As platforms are being built..

ETIM
Internatior

# *Managing ETIM MC as a standard*

- *A great opportunity for local ETIM organisations*

*But…*

- *Doubles the amount of work for ETIM International.*
- *Designing classes requires specialized knowledge.*
- *How can we organize and fund this operation in the long run?*